1. Requirements Description

- The Library Database stores relevant information on tracking and managing a user's books, their publishers and authors, the physical copies of each book in the library, their loan transactions, and fines generated from overdue dates, damages or losses, with payment information provided by the user.
- A User has a unique user ID, first name, last name, email, and phone number.
    - Each User can request zero to many book loans, but each loan belongs to exactly one User.
- A Book has a unique book ID, title, edition, ISBN, and publication year.
- A Book Copy has a unique copy ID, purchase copy date, and the status of each copy.
    - A book can have no copies or up to many copies within the library, but each copy belongs to exactly one book.
    - Each book copy can be loaned zero or many times, but each loan is for exactly one copy.
- An Author has a unique author ID, first name, and last name.
    - An author can write one to many books, and a book can be written by at least one or many authors.
- A Publisher has a unique publisher ID, name, address, website, and number.
    - A publisher can publish one or many books, but each book has exactly one publisher.
- A Book Loan has a unique loan ID, a loan due date, and a checkout Date.
    - A Book Loan may generate zero or many fines, but each fine will come from exactly one loan.
- A Fine has a unique fine ID, fine amount, fine date, reason, and fine status.
    - A fine may be settled with zero or one payment, but each payment settles one fine.
- Each Payment has a payment ID, amount, payment date, and payment type.
    - Users can make at zero to many payments, but each payment is made by exactly one user.

3. ER Diagram

The figure below shows the ER diagram of the University Library Database (UNILIBRARY).

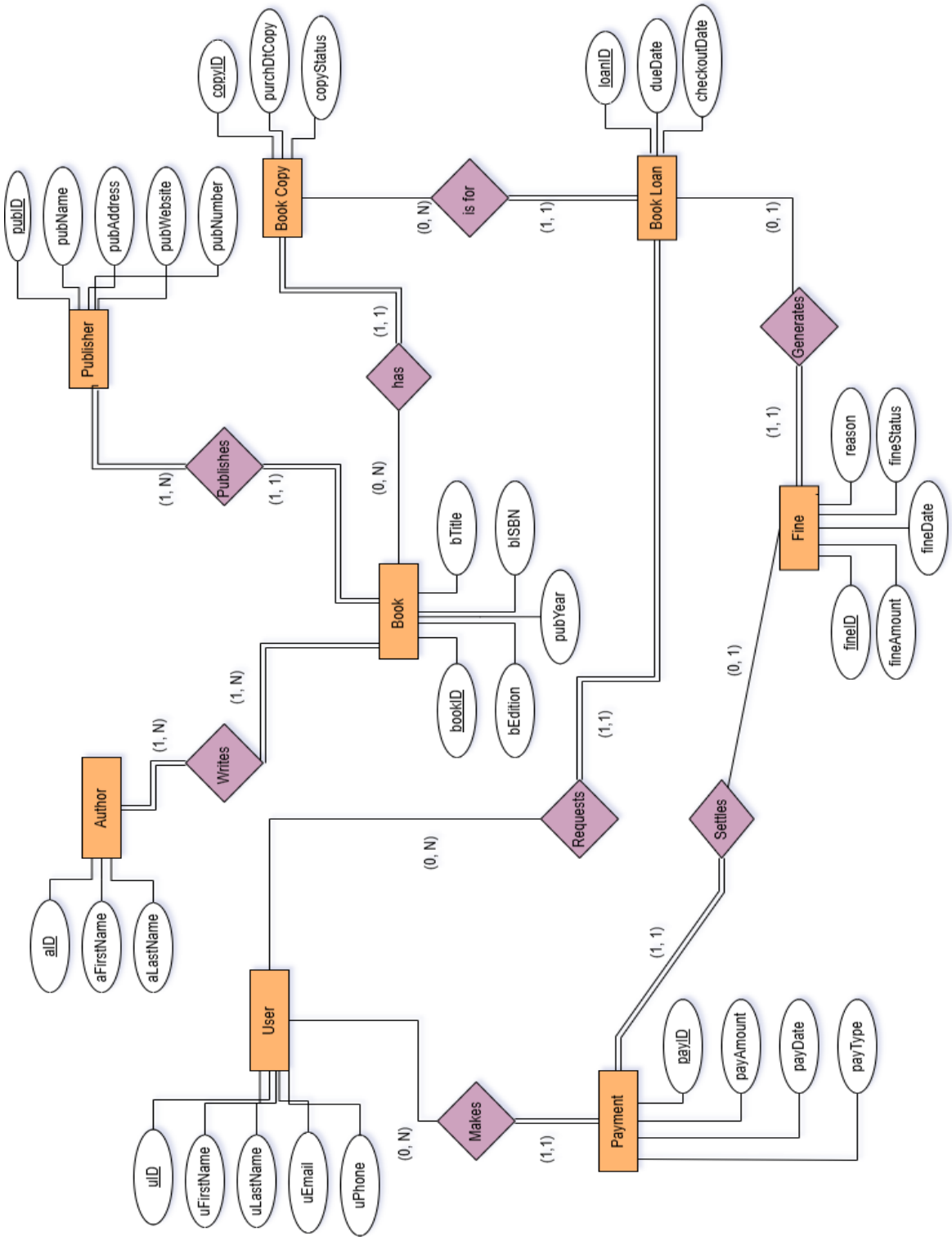

4. ER Diagram Uncaptured Constraints

The following is a list of constraints that are not captured by the ER diagram of UNILIBRARY:

- Fines are generated from overdue duration, damage, or loss.
- fineAmount must be positive.
- copyStatus must be one of {Available or On Loan}
- The bISBN attribute must be unique for each book and must follow the standard ISBN-10 or ISBN-13 format.
- Payment amount must be positive monetary value expressed in U.S. dollars.
- Payment forms include cash, credit, and debit cards.

5. Relational Schema

This section provides the relational schema with referential integrity and the relational table details.

5.1 Relational Schema with Referential Integrity

User (uID, uFirstName, uLastName, uEmail, uPhone)

Author (aID, aFirstName, aLastName)

Writes (aID, bookID)

Foreign Key (aID) references author (aID)

Foreign Key (bookID) references book (bookID)

Publisher (pubID, pubName, pubAddress, pubWebsite, pubNumber)

Book (bookID, bEdition, bISBN, bTitle, pubYear, pubID)

Foreign Key (pubID) references Publisher (pubID)

Book Copy (copyID, purchDtCopy, copyStatus, bookID)

Foreign Key (bookID) references Book (bookID)

Book Loan (loanID, checkoutDate, dueDate, copyID, uID)

Foreign Key (copyID) references Book Copy (copyID)

Foreign Key (uID) references User (uID)

Fine (fineID, fineAmount, fineDate, fineStatus, reason, loanID)

Foreign Key (loanID) references Book Loan (loanID)

Payment (PayID, payAmount, payDate, payType, uID, fineID)

Foreign Key (uID) references User (uID)

Foreign Key (fineID) references Fine (fineID)

5.2 Relational Table Details

The relational schema given in Section 5.1 was mapped into the following tables in the UNILIBRARY database. Primary keys have been underlined. Tables that have multiple attributes underlined represent composite keys.

Table Name	Attribute	Description
User	uID	Unique user ID number
	uFirstName	First name of user
	uLastName	Last name of user
	uEmail	Email of user
	uPhone	Phone of user
Author	aID	Unique author ID
	aFirstName	First name of Author
	aLastName	Last name of Author
Writes	aID	ID of the author writing the book
	bookID	ID of the book the author(s) wrote
Publisher	pubID	Unique publisher ID
	pubName	Name of publisher
	pubAddress	Address of publisher
	pubWebsite	Website of publisher
	pubNumber	Number of publisher
Book	bookID	Unique book ID
	bEdition	Edition of the book
	bTitle	Title of the book
	bISBN	ISBN of the book
	pubYear	Year the book was published
	pubID (FK)	Unique publisher ID of the Book
Book Copy	copyID	Unique ID of the book copy
	purchDtCopy	Date a book copy is purchased
	CopyStatus	Status of the book copy
	bookID (FK)	Unique book ID of the copy belonging to
Book Loan	loanID	Unique loan ID
	checkoutDate	Date the loan is due
	dueDate	Date the loan is processed/assessed
	copyID (FK)	Copy that the loan is assessed to
	uID (FK)	Unique user ID where loan is applied to

Fine	fineID	Unique fine ID
	fineAmount	Amount of the fine
	fineDate	Date of the fine
	reason	Reason of the fine
	fineStatus	Status of the fine
	loanID (FK)	Unique loan ID the fine is assessed to
Payment	payID	Unique payment ID
	payAmount	Payment amount
	payDate	Date the payment is made
	payType	Type of payment
	uID (FK)	Unique user ID number having the payment
	fineID (FK)	Unique fine ID number for each fine